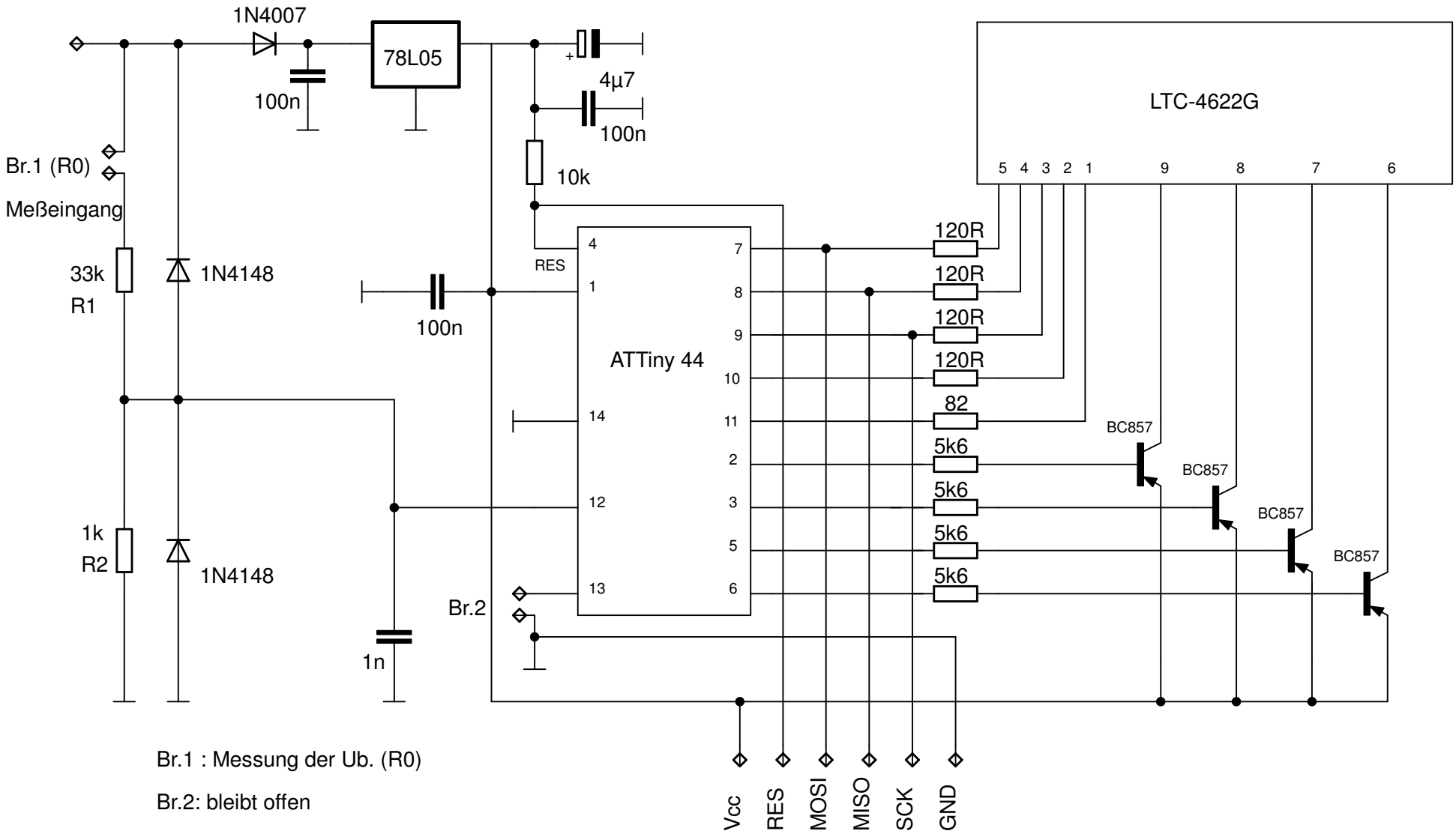
1N4007
78L05
100n
4µ7
100n
10k
LTC-4622G
5 4 3 2 1 9 8 7 6
Br.1 (R0)
Meßeingang
33k
R1
1N4148
100n
RES
ATTiny 44
4 1 14 12 13
7 8 9 10 11 2 3 5 6
120R
120R
120R
120R
82
5k6
5k6
5k6
5k6
BC857
BC857
BC857
BC857
1k
R2
1N4148
1n
Br.2
Br.1 : Messung der Ub. (R0)
Br.2: bleibt offen
Vcc
RES
MOSI
MISO
SCK
GND